ENGINE

Model
Engine family.....6BG1XAB
Engine type.....6BG1XABFA
Type ..... 4-cycle water-cooled, direct injection
Aspiration .....Turbocharged, intercooled
No. of cylinders 6
Rated power
Traveling
DIN 6271, net.....110kW(150PS,147HP) at 2100min^{-1}(rpm)
SAE J1349, net.....110kW(150PS,147HP) at 2100min^{-1}(rpm)
ISO9249.....110kW(150PS,147HP) at 2100min^{-1}(rpm)
ECE-R24 .....108.1kW(147PS,145HP) at 2100min^{-1}(rpm)
Digging
DIN 6271, net .....H/P mode:110kw(150PS,147HP) at 2100min^{-1}(rpm)
P mode:105.6kw(144PS,142HP) at 1900min^{-1}(rpm)
SAE J1349, net ...H/P mode:110kw(150PS,147HP) at 2100min^{-1}(rpm)
P mode:105.6kw(144PS,142HP) at 1900min^{-1}(rpm)
ISO 9249, net .....H/P mode:110kw(150PS,147HP) at 2100min^{-1}(rpm)
P mode:105.6kw(144PS,142HP) at 1900min^{-1}(rpm)
Maximum torque ..... 550 N·m (56 kgf·m, 405 lbf·ft) at 1 600 min^{-1} (rpm)
Piston displacement ..... 6.494 L (396 in^3)
Bore and stroke ..... 105 mm × 125 mm (4.13" × 4.92")
Batteries ..... 2 × 12 V / 97 AH
Governor ..... Mechanical speed control with stepping motor

HYDRAULIC SYSTEM

- Work mode selector
  Digging mode / Attachment mode
- Engine speed sensing system

Main pumps ..... 2 variable displacement axial piston pumps
Maximum oil flow ..... 2 × 214 L/min (56.5 US gpm, 47.0 Imp gpm)
Pilot pump ..... 1 gear pump
Max. oil flow ..... 36 L/min (9.5 US gpm, 7.9 Imp gpm)
Steering pump .....1 gear pump
Max. oil flow ..... 36 L/min (9.5 US gpm, 7.9 Imp gpm)

Hydraulic Motors

Travel .....1 variable displacement axial piston motor
Swing .....1 axial piston motor

Relief Valve Settings

Implement circuit ..... 34.3 MPa (350 kgf/cm^2, 4 980 psi)
Swing circuit ..... 30.4 MPa (310 kgf/cm^2, 4 410 psi)
Travel circuit ..... 34.3 MPa (350 kgf/cm^2, 4 980 psi)
Pilot circuit ..... 3.9 MPa (40 kgf/cm^2, 570 psi)

Hydraulic Cylinders

High-strength piston rods and tubes. Cylinder cushion mechanisms provided in boom and arm cylinders to absorb shock at stroke ends.

Dimensions

	Qty.	Bore	Rod diameter
Boom	2	120 mm (4.72")	85 mm (3.35")
Arm	1	135 mm (5.32")	95 mm (3.74")
Bucket	1	115 mm (4.53")	80 mm (3.15")

Hydraulic Filters

Hydraulic circuits use high-quality hydraulic filters. A suction filter is incorporated in the suction line, and full-flow filters in the return line and swing/travel motor drain lines.

CONTROLS

Pilot controls. Hitachi's original shockless valve and quick warm-up system built in the pilot circuit.
Implement levers 2
Travel pedal 1
Outrigger and/or blade lever 1

UPPERSTRUCTURE

Revolving Frame

Welded sturdy box construction, using heavy-gauge steel plates for ruggedness. Reinforced frame for resistance to deformation.

Swing Divice

Axial piston motor with planetary reduction gear is bathed in oil. Swing circle is single-row, shear-type ball bearing with induction-hardened internal gear. Internal gear and pinion gear are immersed in lubricant. Swing parking brake is spring-set/hydraulic-released disc type.
Swing speed ..... 13.6 min^{-1} (rpm)

Operator's Cab

Independent roomy cab, 1 005 mm (40") wide by 1 675 mm (66") high, conforming to ISO* Standards. Reinforced glass windows on 4 sides for visibility. Openable front windows (upper and lower). Adjustable, reclining seat with armrests; movable with or without control levers.

* International Standardization Organization

UNDERCARRIAGE

Wheeled type undercarriage. The frame is of welded, stress-relieved structure.
Drive system : 2 gear power shift transmission and variable displacement axial piston type travel motor.
Travel speed (forward and reverse)
Creeper speed range ..... 0 to 2.0 km/h
Low speed range ..... 0 to 6.6 km/h
High speed range ..... 0 to 25.0 km/h
Gradeability ..... 35 degree (70%)
Min. turning radius ..... 7 200 mm
Axle :
All-wheel drive.
The front axle can be locked hydraulically in any position.
Oscillating front axle..... ± 6°
Brakes system :
Maintenance free wet-disk brakes on front axle and rear axle are standard.
Fully hydraulic service brake system.

OPERATING WEIGHT

ZAXIS210W:
Equipped with 2.91m arm and 0.8 m³ (SAE, PCSA heaped) bucket.

Stabilization	Operating weight
Rear Blade	19 200 kg (42 300 lb)
Rear Outrigger	19 400 kg (42 800 lb)
Front and Rear Outrigger	20 600 kg (45 400 lb)
Outrigger and Blade	20 300 kg (44 800 lb)

SERVICE REFILL CAPACITIES

	litter	US gal	Imp gal
Fuel tank	340	89.8	74.8
Engine coolant	23	6.0	5.1
Engine oil	25	6.6	5.5
Swing divice	6.2	1.6	1.4
Transmission	2.9	0.8	0.6
Front differential gear	11	2.9	2.4
Rear differential gear	13	3.4	2.9
Hub reduction gear			
Front axle	2 × 2	2 × 0.5	2 × 0.4
Rear axle	2 × 2	2 × 0.5	2 × 0.4
Hydraulic system	310	81.9	68.2
Hydraulic tank	135	35.7	29.7

BACKHOE ATTACHMENTS

Boom and arms are of welded, box-section design.
2.22 m (7'3") and 2.91 m (9'7") arms are available for monoblock boom.
Bucket is of all-welded, high-strength steel structure.

Buckets

Capacity		Width		No. of teeth	Weight	2.22 m (7'3") arm	2.91 m (9'7") arm
SAE, PCSA heaped	CECE heaped	With side cutters	With out side cutters				
0.51 m³ (0.67 yd³)	0.45 m³	850 mm (33")	720 mm (28")	3	530 kg (1 170 lb)	◎	◎
0.80 m³ (1.05 yd³)	0.70 m³	1 140 mm (45")	1 030 mm (41")	5	670 kg (1 480 lb)	◎	◎
0.91 m³ (1.19 yd³)	0.80 m³	1 280 mm (50")	1 150 mm (45")	5	720 kg (1 590 lb)	◎	○
1.10 m³ (1.44 yd³)	0.90 m³	1 460 mm (58")	1 330 mm (52")	6	780 kg (1 720 lb)	□	–
1.20 m³ (1.57 yd³)	1.00 m³	—	1 450 mm (57")	6	690 kg (1 520 lb)	□	–

◎ Suitable for materials with density of 1 800 kg/m³ (3 030 lb/yd³) or less
○ Suitable for materials with density of 1 600 kg/m³ (2 700 lb/yd³) or less
□ Suitable for materials with density of 1 100 kg/m³ (1 850 lb/yd³) or less

WORKING RANGES

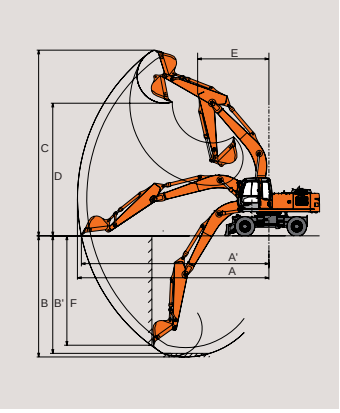

Unit: mm (ft in)

Arm length		2.22 m (7'3")	2.91 m (9'7")
A Max. digging reach		9 490 (31'2")	10 150 (33'4")
A' Max. digging reach (on ground)		9 270 (30'5")	9 950 (32'8)
B Max. digging depth		5 730 (18'10")	6 420 (21'1")
B' Max. digging depth (8' level)		5 490 (18')	6 230 (20'5")
C Max. cutting height		9 420 (30'11")	9 850 (32'4")
D Max. dumping height		6 640 (21'9")	7 040 (23'1")
E Min. swing radius		3 780 (12'5")	3 770 (12'4")
F Max. vertical wall		4 890 (16'1")	5 800 (19')
Bucket digging force*	ISO	151 kN (15 400 kgf, 34 000 lbf)	151 kN (15 400 kgf, 34 000 lbf)
	SAE, PCSA	129 kN (13 200 kgf, 29 000 lbf)	129 kN (13 200 kgf, 29 000 lbf)
Arm digging force*	ISO	141kN (14 400 kgf, 31 700 lbf)	109 kN (11 100 kgf, 42 500 lbf)
	SAE, PCSA	134 kN (13 700 kgf, 30 200 lbf)	102 kN (10 400 kgf, 23 000 lbf)

*At power boost

DIMENSIONS

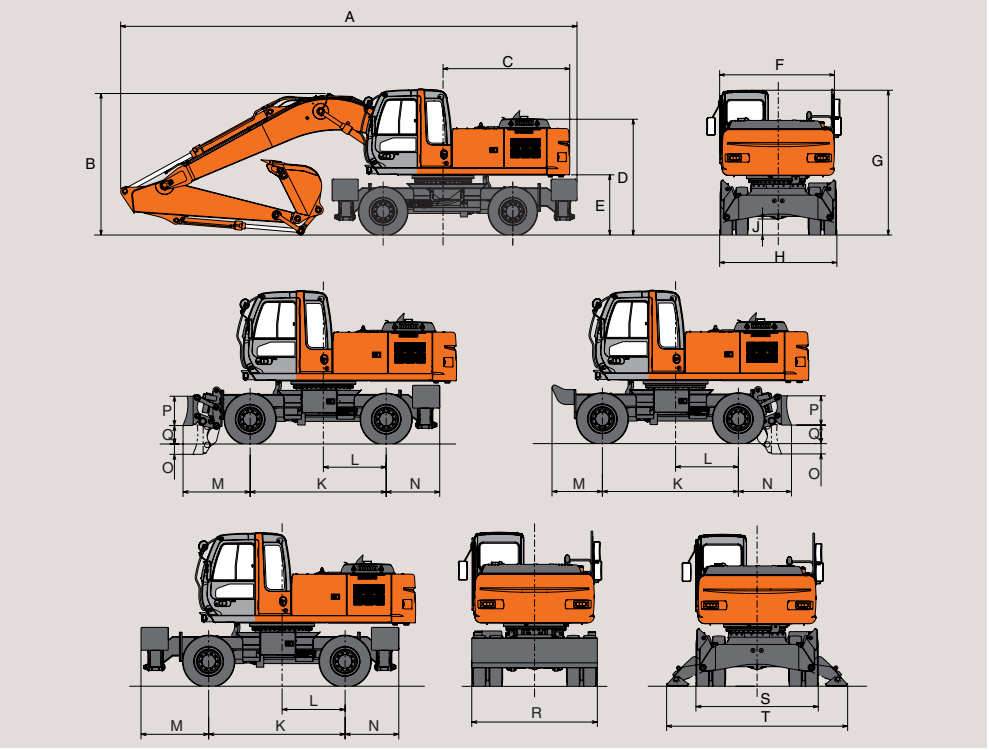

Unit: mm (ft in)

	Rear BL	Rear O/R	Front BL Rear O/R	Front and Rear O/R
A Overall length				
2.22m arm (7'3")	9 790 (32'1")	9 790 (32'1")	9 790 (32'1")	9 790 (32'1")
2.91m arm (9'7")	9 660 (31'1")	9 660 (31'1")	9 810 (32'2")	9 810 (32'2")
B Overall height				
2.22m arm (7'3")	3 160 (10'4")			
2.91m arm (9'7")	*3 110 (10'2")			
C Rear-end swing radius	2 700 (8'10")			
D Engine cover height	2 465 (8'11")			
E Counterweight clearance	1 275 (4'2")			
F Overall width of upperstructure	2 490 (8'2")			
G Overall height of cab	3 110 (10'2")			
H Overall width of tires	2 500 (8'2")	2 500 (8'2")	2 500 (8'2")	2 500 (8'2")
J Min. ground clearance	340 (1'1")			
K Wheel base	2 750 (9')			
L Swing-center to rear axle	1 270 (4'2")			
M Front overhang	1 020 (3'4")	1 020 (3'4")	1 355 (4'5")	1 365 (4'6")
N Rear overhang	1 075 (3'6")	1 080 (3'7")	1 080 (3'7")	1 080 (3'7")
O Max. blade lower	215 (9")	—	215 (9")	—
P Height of bla de	590 (1'11")	—	590 (1'11")	—
Q Max. blade raise	375 (1'3")	—	375 (1'3")	—
R Overall width of blade	2 530 (8'4")	—	2 530 (8'4")	—
S Overall width of O/R retract	—	2 470 (8'1")	2 470 (8'1")	2 470 (8'1")
T Overall width of O/R extend	—	3 700 (12'2")	3 700 (12'2")	3 700 (12'2")

Transportation dimensions are A, B, H (without blade) or A, B, R (with blade).
* Cab Height

LIFTING CAPACITIES

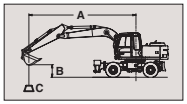

A: Load radius
B: Load point height
C: Lifting capacity

METRIC MEASURE

ZAXIS210W with 5.68 m boom and 2.91 m arm

Rating over-side or 360 degrees Rating over-rear Unit: 1 000 kg

Stabilization		Load radius 3 m		4 m		5 m		6 m		7 m		At max. reach		
														meter
6 m	Rear blade up									2.2	3.2	1.3	1.9	9.01
	Rear blade down									2.6	*3.7	1.5	*2.4	
	Rear outrigger down									3.1	*3.7	1.9	*2.4	
	Front outrigger and rear blade down									*3.7	*3.7	*2.4	*2.4	
	Front blade and rear outrigger down									*3.7	*3.7	*2.4	*2.4	
	4 outrigger down									*3.7	*3.7	*2.4	*2.4	
5 m	Rear blade up.							3.0	*4.0	2.2	3.1	1.1	1.7	9.41
	Rear blade down							3.4	*4.0	2.5	*3.9	1.3	*2.4	
	Rear outrigger down							*4.0	*4.0	3.0	*3.9	1.7	*2.4	
	Front outrigger and rear blade down							*4.0	*4.0	3.9	*3.9	2.2	*2.4	
	Front blade and rear outrigger down							*4.0	*4.0	*3.9	*3.9	2.3	*2.4	
	4 outrigger down							*4.0	*4.0	*3.9	*3.9	*2.4	*2.4	
4 m	Rear blade up.					3.8	*5.1	2.8	4.0	2.1	3.0	1.0	1.6	9.66
	Rear blade down					4.4	*5.1	3.2	*4.6	2.4	*4.3	1.2	*2.4	
	Rear outrigger down					*5.1	*5.1	3.8	*4.6	2.9	*4.3	1.5	*2.4	
	Front outrigger and rear blade down					*5.1	*5.1	*4.6	*4.6	3.8	*4.3	2.1	*2.4	
	Front blade and rear outrigger down					*5.1	*5.1	*4.6	*4.6	3.9	*4.3	2.2	*2.4	
	4 outrigger down					*5.1	*5.1	*4.6	*4.6	*4.3	*4.3	*2.4	*2.4	
3 m	Rear blade up.			4.9	7.2	3.5	5.1	2.6	3.8	2.0	2.9	0.9	1.5	9.79
	Rear blade down			5.7	8.5	4.1	*6.4	3.0	*5.3	2.3	*4.7	1.1	*2.5	
	Rear outrigger down			6.9	8.5	4.9	*6.4	3.6	*5.3	2.8	*4.7	1.5	*2.5	
	Front outrigger and rear blade down			*8.5	8.5	6.3	*6.4	4.7	*5.3	3.6	*4.7	2.0	*2.5	
	Front blade and rear outrigger down			*8.5	8.5	*6.4	*6.4	4.9	*5.3	3.8	*4.7	2.1	*2.5	
	4 outrigger down			*8.5	8.5	*6.4	*6.4	*5.3	*5.3	4.5	*4.7	*2.5	*2.5	
2 m	Rear blade up.					3.2	4.7	2.4	3.6	1.9	2.8	0.9	1.5	9.80
	Rear blade down					3.7	*7.7	2.8	*6.1	2.2	*5.3	1.1	*2.6	
	Rear outrigger down					4.6	*7.7	3.4	*6.1	2.7	*5.3	1.4	*2.6	
	Front outrigger and rear blade down					6.0	*7.7	4.5	*6.1	3.5	*5.3	1.9	*2.6	
	Front blade and rear outrigger down					6.2	*7.7	4.7	*6.1	3.7	*5.3	2.0	*2.6	
	4 outrigger down					7.5	*7.7	5.6	*6.1	4.4	*5.3	2.5	*2.6	
1 m	Rear blade up.					3.0	4.5	2.3	3.4	1.8	2.7	0.9	1.5	9.69
	Rear blade down					3.5	*8.7	2.7	*6.8	2.1	*5.7	1.1	*2.7	
	Rear outrigger down					4.3	*8.7	3.3	*6.8	2.6	5.4	1.4	*2.7	
	Front outrigger and rear blade down					5.7	*8.7	4.3	*6.8	3.4	*5.7	2.0	*2.7	
	Front blade and rear outrigger down					6.0	*8.7	4.5	*6.8	3.5	*5.7	2.1	*2.7	
	4 outrigger down					7.2	*8.7	5.4	*6.8	4.2	*5.7	2.5	*2.7	
0 m	Rear blade up.			4.0	*6.1	2.9	4.3	2.2	3.3	1.7	2.6	1.0	1.5	9.45
	Rear blade down			4.7	*6.1	3.4	*9.3	2.6	*7.4	2.0	6.0	1.2	*3.0	
	Rear outrigger down			5.9	*6.1	4.2	9.3	3.2	6.8	2.5	5.3	1.5	*3.0	
	Front outrigger and rear blade down			*6.1	*6.1	5.6	*9.3	4.2	*7.4	3.3	*6.1	2.0	*3.0	
	Front blade and rear outrigger down			*6.1	*6.1	5.8	*9.3	4.4	*7.4	3.5	5.9	2.1	*3.0	
	4 outrigger down			*6.1	*6.1	7.0	*9.3	5.3	*7.4	4.1	*6.1	2.6	*3.0	
-1 m	Rear blade up.	*4.1	*4.1	4.0	6.2	2.8	4.3	2.1	3.2	1.6	2.5	1.0	1.7	9.07
	Rear blade down	*4.1	*4.1	4.7	*9.2	3.3	*9.6	2.5	*7.6	1.9	6.0	1.3	*3.3	
	Rear outrigger down	*4.1	*4.1	5.8	*9.2	4.1	9.2	3.1	6.7	2.4	5.2	1.6	*3.3	
	Front outrigger and rear blade down	*4.1	*4.1	7.9	*9.2	5.5	*9.6	4.1	*7.6	3.3	*6.3	2.2	*3.3	
	Front blade and rear outrigger down	*4.1	*4.1	8.3	*9.2	5.7	*9.6	4.3	7.6	3.4	5.9	2.3	*3.3	
	4 outrigger down	*4.1	*4.1	*9.2	*9.2	7.0	*9.6	5.2	*7.6	4.1	6.0	2.7	*3.3	
-2 m	Rear blade up.	6.5	*7.9	4.0	6.2	2.8	4.3	2.1	3.2	1.6	2.5	1.2	1.9	8.52
	Rear blade down	7.7	*7.9	4.7	*12.0	3.3	*9.5	2.5	*7.7	1.9	5.9	1.4	*3.7	
	Rear outrigger down	*7.9	*7.9	5.9	*12.0	4.1	9.2	3.1	6.7	2.4	5.2	1.8	*3.7	
	Front outrigger and rear blade down	*7.9	*7.9	7.9	*12.0	5.5	*9.5	4.1	*7.7	3.2	*6.4	2.4	*3.7	
	Front blade and rear outrigger down	*7.9	*7.9	8.3	*12.0	5.7	*9.5	4.3	7.5	3.4	5.8	2.5	*3.7	
	4 outrigger down	*7.9	*7.9	10.3	*12.0	6.9	*9.5	5.2	*7.7	4.1	6.0	3.0	*3.7	
-3 m	Rear blade up.	6.6	*9.8	4.1	6.3	2.8	4.3	2.1	3.2	1.6	2.5	1.4	2.2	7.78
	Rear blade down	7.8	*9.8	4.8	*11.3	3.3	*9.1	2.5	*7.4	1.9	6.0	1.7	*4.5	
	Rear outrigger down	*9.8	*9.8	6.0	*11.3	4.1	*9.1	3.1	6.7	2.4	5.2	2.1	*4.5	
	Front outrigger and rear blade down	*9.8	*9.8	8.0	*11.3	5.5	*9.1	4.1	*7.4	3.3	*6.1	2.8	*4.5	
	Front blade and rear outrigger down	*9.8	*9.8	8.4	*11.3	5.8	*9.1	4.3	*7.4	3.4	5.9	3.0	*4.5	
	4 outrigger down	*9.8	*9.8	10.3	*11.3	7.0	*9.1	5.2	*7.4	4.1	6.0	3.6	*4.5	

Notes:
1. Ratings are based on SAE J1097.
2. Lifting capacity of the ZAXIS Series does not exceed 75% of tipping load with the machine on firm level ground, or 87% full hydraulic capacity.
3. The load point is a hook (not standard equipment) located on the back of the bucket.
4. *Indicates load limited by hydraulic capacity.